Current part is item (6) on diagram. Available at www.oshkoshequipment.com

(1) ILLUS. (a) FIG. NO.	(2) (b) ITEM NO.	(3) SMR CODE	(3) NATIONAL STOCK NUMBER	(4) PART NUMBER	(5) FSCM	(6) DESCRIPTION USABLE ON CODE	(7) U/M	(8) QTY INC IN UNIT
						2004 - POWER TAKE-OFF ASSEMBLY		
316	1	PAOZZ	5315-00-839-5822	MS24665-353	96906	PIN,COTTER AE	EA	1
316	2	XB0ZZ	5315-00-140-1938	MS35810-36	96906	PIN AE	EA	1
316	3	PAOOO	2520-00-706-1230	7061230	19207	ROD,SHIFTING LEVER: CONTROL,SHIFTING LEVER: W/YOKE,TRANSMISSION PTO AE	EA	1
316	4	PAOZZ	2520-00-337-8223	7372751	YOKE,DECLU	LEVER ROD,TRANSMISSION PTO AE	EA	1
316	5	PAOZZ	5310-00-732-0560	MS51968-14	96906	NUT,PLAIN,HEXAGON AE	EA	1
316	6	PAOZZ	5340-00-211-5406	7061231	19207	CLEVIS AE	EA	1
316	7	PAOZZ	5310-00-067-9507	MS51922-37	96906	NUT,SELF-LOCKING AE	EA	1
316	8	PAOZZ	5305-00-226-7768	MS90726-115	96906	SCREW,CAP,HEXAGON HEAD AE	EA	1
316	9	PAOZZ	2520-00-706-1229	7061229	19207	LEVER,SHIFTING: HAND, TRANSMISSION PTO AE	EA	1
316	10	XBOZZ		7373223	19207	BOLT,MACHINE: HAND LEVER SUPPORT TO BRAKE MASTER CYLINDER,TRANSMISSION PTO AE	EA	2
316	11	PAOZZ	2520-00-622-3927	7529104	19207	SUPPORT,SHIFTING LEVER AE	EA	1
316	12	PAOZZ	5310-00-959-7600	MS51922-5	96906	NUT,SELF-LOCKING AE	EA	2
316	13	PAOZZ	5305-00-068-0504	MS90726-3	96906	SCREW,CAP,HEXAGON HEAAD AE	EA	2
316	14	PAOZZ	2520-00-753-8790	7538790	19207	LOCK: SHIFTING LEVER, TRANSMISSION PTO AE	EA	1
316	15	PAOZZ	5305-00-855-0961	MS24629-35	96906	SCREW,TAPPING,THREAD AE	EA	2
316	16	PAOZZ	9905-00-753-8792	7538792	19207	PLATE,INSTRUCTION AEA	EA	1
317	1	PAFZZ	5310-00-732-0559	MS51968-8	96906	NUT,PLAIN,HEXAGON	EA	6
317	2	PAFZZ	5310-00-637-9541	MS35338-46	96906	WASHER,LOCK	EA	6
317	3	PAFZZ	5307-00-753-8668	7538668	19207	STUD,PLAIN	EA	6
317	4	PAFHH	2520-00-229-5673	11609228	19207	POWER TAKE-OFF (TRANS) (SEE TM 9-2520-246-34P)	EA	1
317	5	PAFHH	2520-00-706-1137	7061137	19207	POWER TAKE-0FF: FRONT OUTPUT SHAFT ONLY,TRANSMISSION (USED ON VEHICLE AFTER SERIAL NO. 95238 (SEE TM 9-2520-246-34P)	EA	1
317	5	PAFHH	2520-00-706-1136	7061136	19207	POWER TAKE-OFF: FRONT AND REAR OUTPUT SHAFTS,TRANSMISSION (SEE TM 9-2520-846-34P) (M47,M59,M342,M342A2)	EA	1
318	1	PAOZZ	5305-00-569-8909	7372083	19207	SCREW,WITH LOCK: PTO ROD END (M292A5)	EA	1

Current part is item (6) on diagram. Available at www.oshkoshequipment.com

Current part is item (6) on diagram. Available at www.oshkoshequipment.com

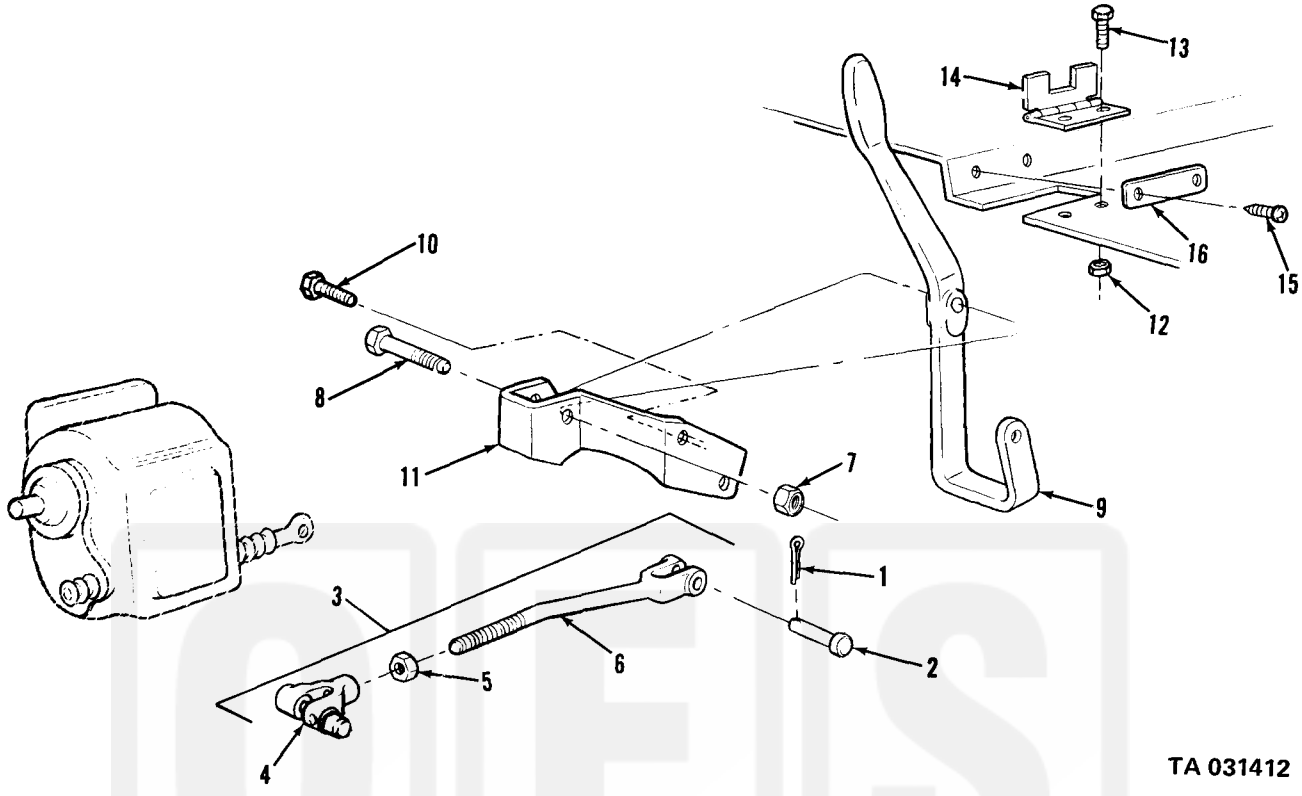

Figure 316. Power take-off controls–transmission.

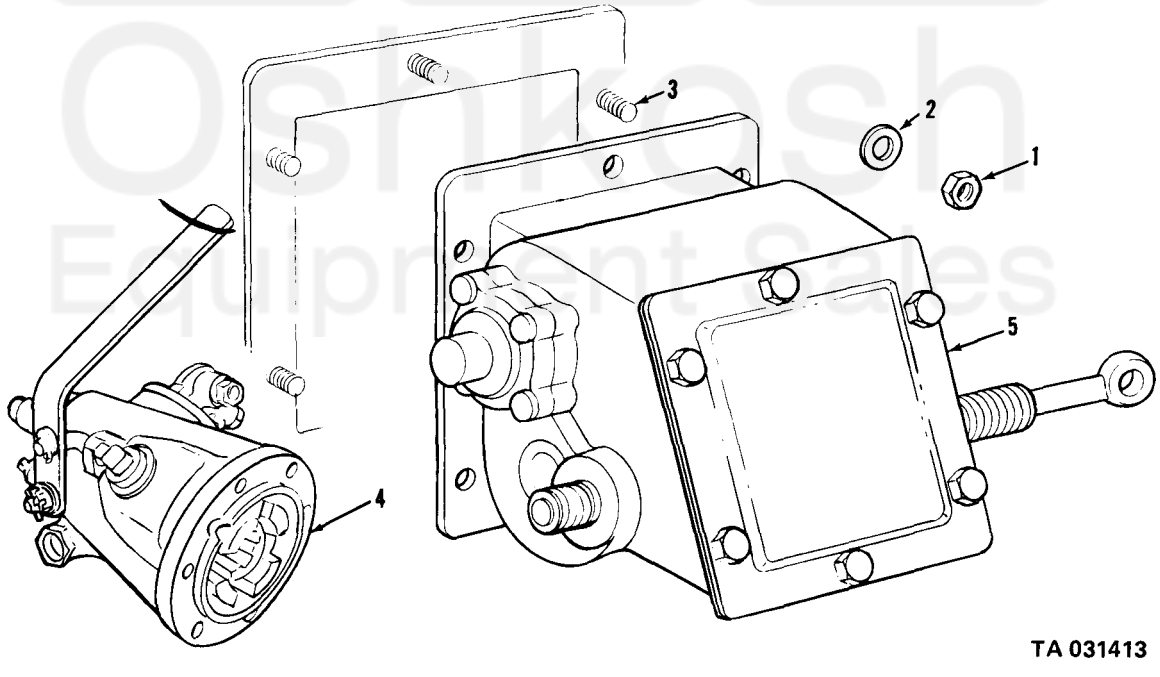

Figure 317. Power take-off assembly.

Current part is item (6) on diagram. Available at www.oshkoshequipment.com